SWC-51KF-R1 and SWC-51KM-R1

WR-51 Band Waveguide to 2.92mm Connector Adapter, Right Angle

Models SWC-51KF-R1 and SWC-51KM-R1 are right angle (90°) WR-51 band waveguide to coax adapters that cover the frequency range of 15 to 22 GHz. They are designed and manufactured for instrumentation grade quality but offered at a commercial grade price, allowing for an efficient transition between the rectangular waveguide and 2.92 mm (K) coax connector. The end launch (180°) versions are offered under model numbers SWC-51KF-E1 and SWC-51KM-E1.

Electrical Specifications:

Parameter	Minimum	Typical	Maximum
Frequency Range	15 GHz		22 GHz
Insertion Loss*		0.16 dB	
Return Loss		22 dB	
Power Handling			10 W (CW)
Specification Temperature		+25°C	
Operating Temperature	-40°C		+85°C

*Insertion loss is tested back to back with male and female adapter, the result is divided by 2.

Mechanical Specifications:

Item	Specification
Waveguide	WR-51 Waveguide with Standard Flange
Coaxial Port	2.92 mm (K) Female for Model Number: SWC-51KF-R1
Coaxial Port	2.92 mm (K) Male for Model Number: SWC-51KM-R1
Material	Aluminum
Finish	Gold Plated
Weight	0.9 Oz
Outline	WC-5R

ECCN

EAR99

FEATURES

- Full Waveguide Band Coverage
- Lower Insertion Loss and VSWR
- Instrumentation Grade
- DC Open Circuit

APPLICATIONS

- Test Lab
- Instrumentations
- Sub-assemblies

SUPPLEMENTAL DETAILS

MAKING MILLIMETERWAVE ACCESSIBLE

Copyright © 2023 by Eravant

Mechanical Outline:

Unless otherwise specified, all dimensions are in inches [millimeters])

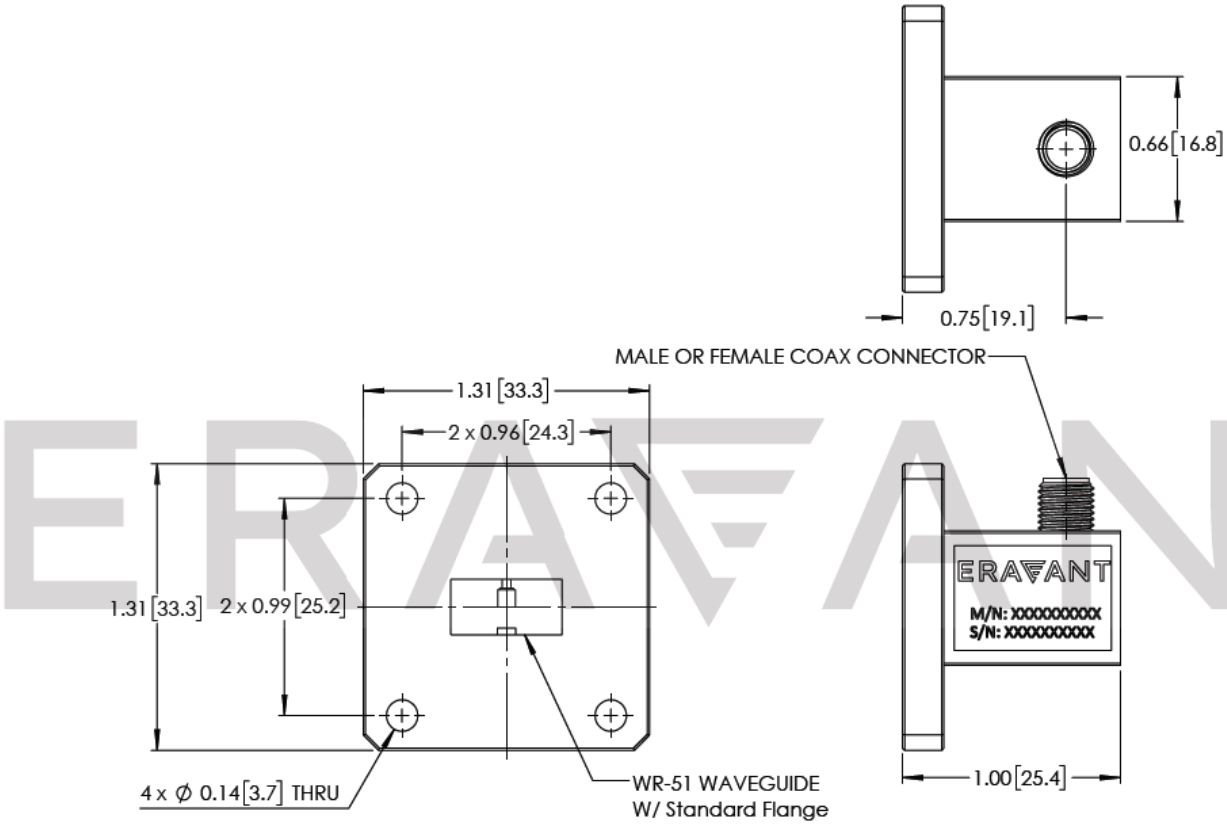

NOTE:

- On condition that test data is provided it is collected from a sample lot. Actual data may vary slightly from unit to unit. All testing is performed under +25 °C room temperature.
- On condition that simulated test data is provided, actual measured data may slightly vary.
- Eravant reserves the right to change the information presented without notice.

CAUTION:

- Any foreign objects in the waveguide will cause performance degradation and may damage or destroy the unit.
- For 1.35 mm, 1.85 mm, 2.4 mm, 2.92 mm, and SMA connectors proper torque should be applied: 8.0 ± 0.15 inch-pounds (0.90 ± 0.02 Nm). Torque wrench model SCH-08008-S1 is highly recommended

MAKING MILLIMETERWAVE ACCESSIBLE

Copyright © 2023 by Eravant

Typical Performance vs. Frequency

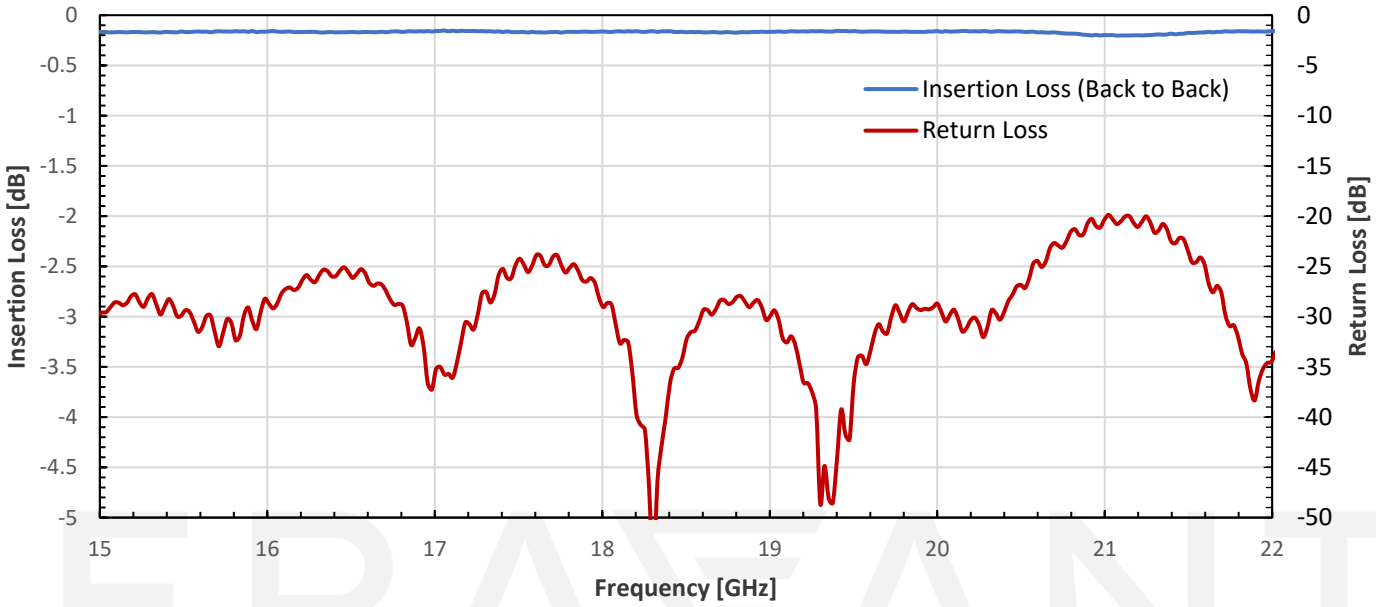

MAKING MILLIMETERWAVE ACCESSIBLE

Copyright © 2023 by Eravant