SWC-28KF-E1-V and SWC-28KM-E1-V

Ka-Band Waveguide to 2.92mm Connector Adapter, End Launch, Thermal Vacuum Safe

Models SWC-28KF-E1-V and SWC-28KM-E1-V are end launch (180°) Ka-Band waveguide to coax adapters that cover the frequency range of 26.5 to 40 GHz. They are designed and manufactured for instrumentation grade quality and thermal vacuum compatibility, allowing for an efficient transition between the rectangular waveguide and 2.92 mm (K) coax connector.

Electrical Specifications:

Parameter	Minimum	Typical	Maximum
Frequency Range	26.5 GHz		40 GHz
Insertion Loss		0.35 dB	0.50 dB
Return Loss	17 dB	20 dB	
Specification Temperature		+25°C	
Operating Temperature	-40°C		+85°C

Mechanical Specifications:

Item	Specification
Waveguide	WR-28 Waveguide with UG-599/U Flange
Coaxial Port	2.92 mm (K) Female for Model Number: SWC-28KF-E1-V
Coaxial Port	2.92 mm (K) Male for Model Number: SWC-28KM-E1-V
Material	Aluminum
Finish	Gold Plated
Weight	0.2 Oz
Outline	WC-AE

ECCN

EAR99

FEATURES

- Thermal Vacuum Safe
- Broad Band Coverage
- Lower Insertion Loss and VSWR
- Instrumentation Grade
- DC Short Circuit

APPLICATIONS

- Thermal Vacuum Chamber
- Test Lab
- Instrumentations
- Sub-assemblies

SUPPLEMENTAL DETAILS

Copyright © 2023 by Eravant

Typical Performance vs. Frequency

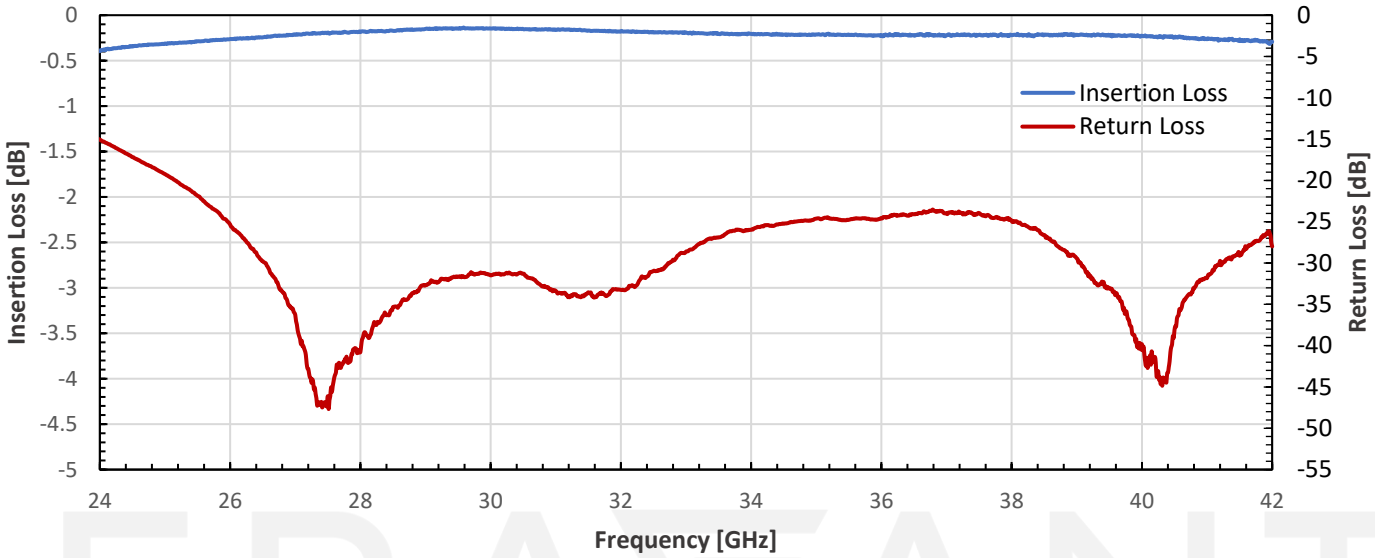

Mechanical Outline:

Unless otherwise specified, all dimensions are in inches [millimeters])

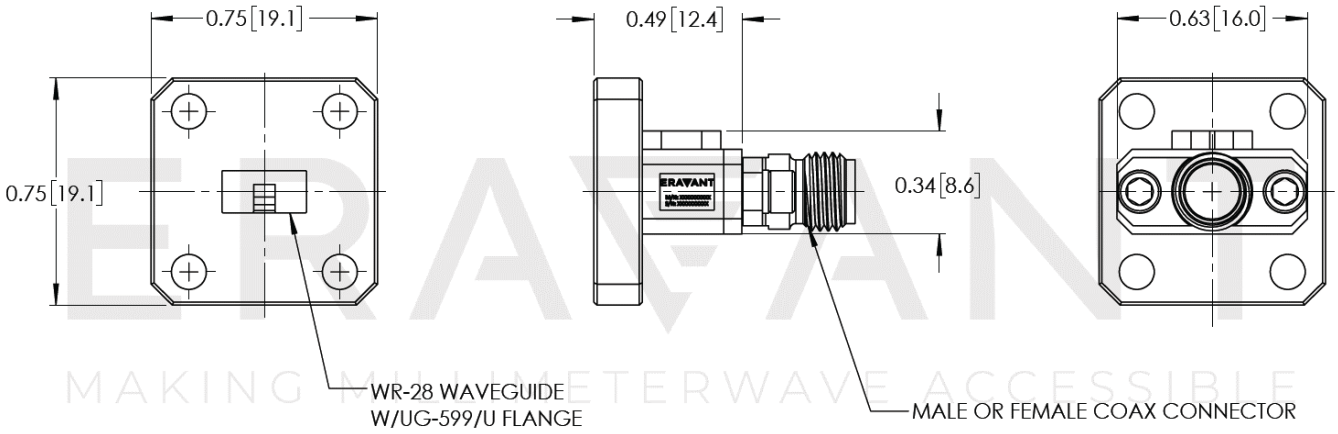

NOTE:

- On condition that test data is provided it is collected from a sample lot. Actual data may vary slightly from unit to unit. All testing is performed under +25 °C room temperature.
- On condition that simulated test data is provided, actual measured data may slightly vary.
- Eravant reserves the right to change the information presented without notice.

CAUTION:

- Any foreign objects in the waveguide will cause performance degradation and may damage or destroy the unit.
- For 1.35 mm, 1.85 mm, 2.4 mm, 2.92 mm, and SMA connectors proper torque should be applied: 8.0 ± 0.15 inch-pounds (0.90 ± 0.02 Nm). Torque wrench model SCH-08008-S1 is highly recommended

Copyright © 2023 by Eravant