STA-40-10-F1

ERAVANT

W-Band Fixed Attenuator, High Precision, 40 dB

Model STA-40-10-F1 is a 40 dB fixed attenuator that is used in millimeterwave systems and operates from 75 to 110 GHz. The attenuator has a fixed attenuation value of 40 dB at center frequency, 92.5 GHz. The attenuator's waveguides are manufactured with precision wire EDM to ensure high accuracy and a quality internal surface finish. The design features anti-cocking flanges to reduce misalignment errors and a sandblasted surface treatment to provide a durable finish. While the attenuator is designed for full waveguide band applications, the attenuation value does show a minor slope within the band due to its distinct mechanical configuration. Other attenuation values are available under different model numbers as **STA-XX-10-F1**, where **XX** is the desired attenuation value.

Electrical Specifications:

Parameter	Minimum	Typical	Maximum
Frequency Range	75 GHz		110 GHz
Attenuation @ 92.5 GHz		40.0 dB	
Return Loss		20 dB	
Power Handling		500 mW	750 mW (CW)
Specification Temperature		+25°C	
Operating Temperature	-40°C		+85°C

Mechanical Specifications:

Item	Specification
RF Ports	WR-10 Waveguide with UG-387/U-M Anti-Cocking Flange
Attenuation Setting Type	Fixed
Insertion Length	2.50"
Material	Brass
Finish	Gold Plated
Weight	1.7 Oz
Outline	TA-FW-A

ECCN

EAR99

FEATURES

- Full Band Coverage
- Lost Cost
- Accurate Attenuation Value at Center Frequency High Resolution Micrometer

APPLICATIONS

- Test Lab
- Instrumentations
- System Integration

SUPPLEMENTAL DETAILS

Copyright © 2023 by Eravant

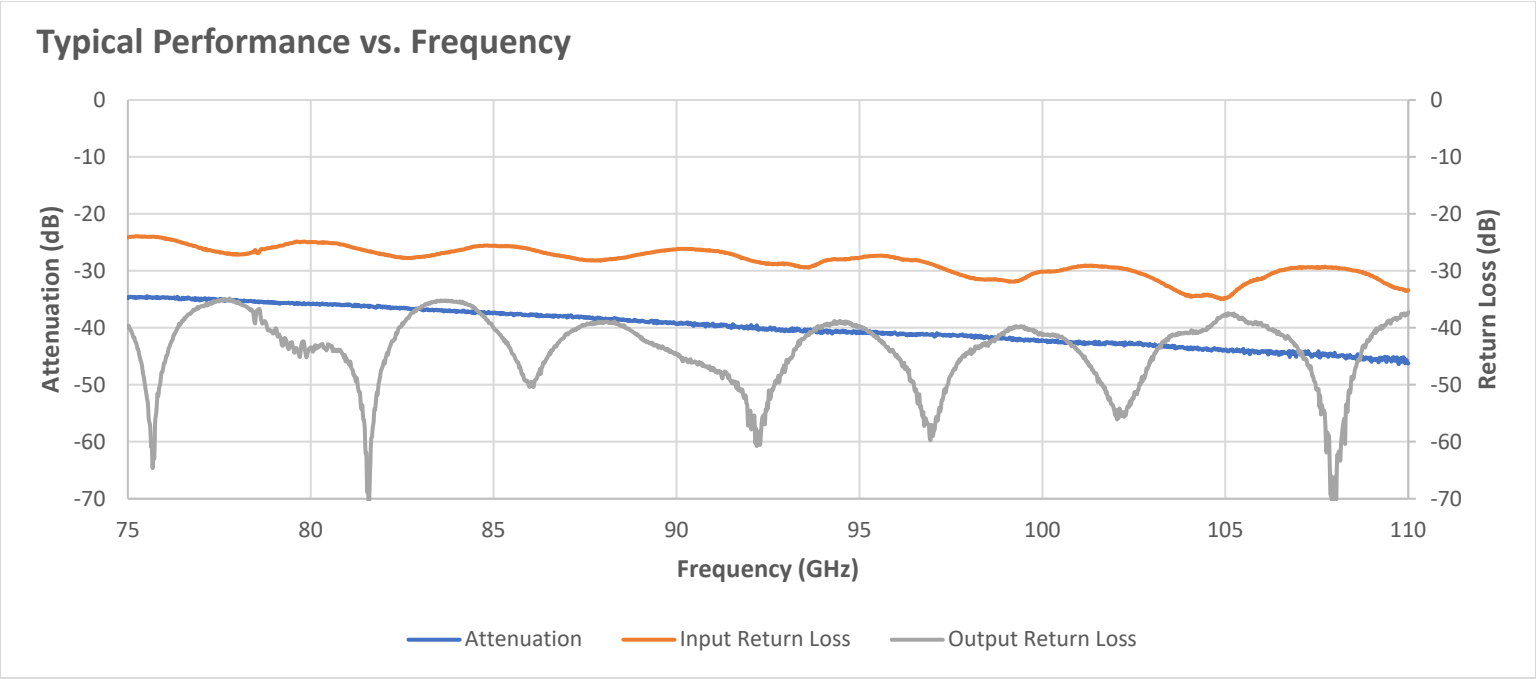

Mechanical Outline: (Unless otherwise specified, all dimensions are in inches [millimeters])

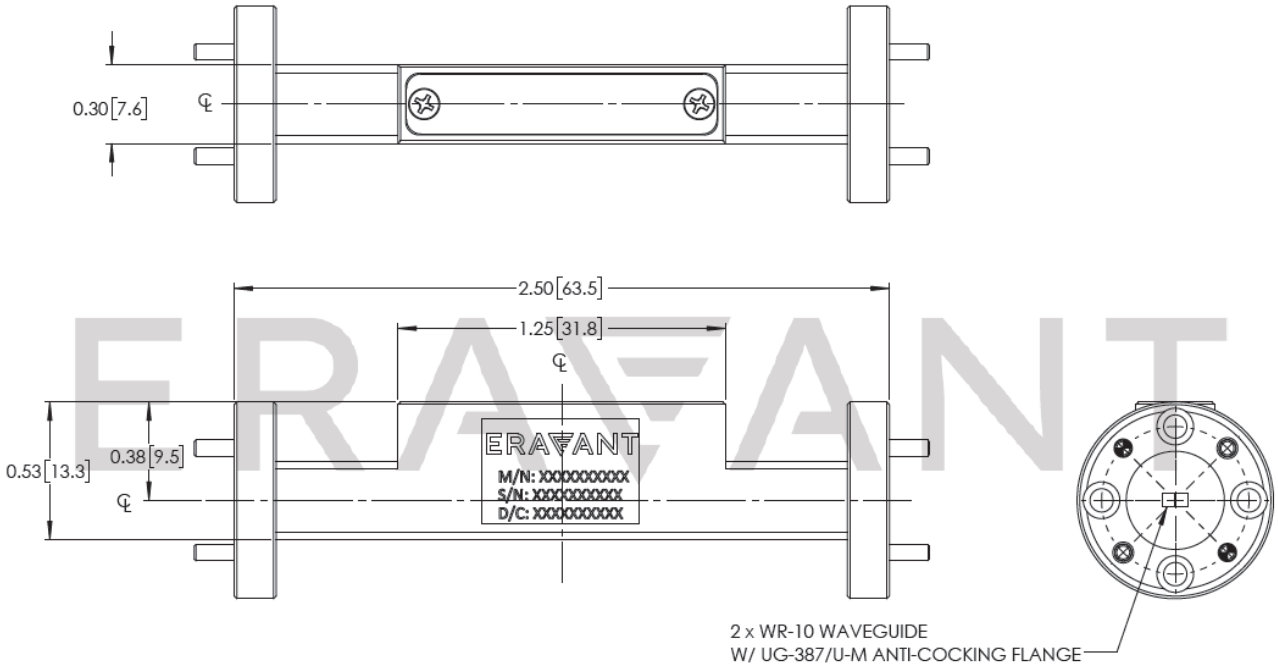

Copyright © 2023 by Eravant

NOTE:

- All data presented is collected from a sample lot. Actual data may vary unit to unit, slightly.
- All testing was performed under +25 °C case temperature.
- Eravant reserves the right to change the information presented without notice.

CAUTION:

- Exceeding absolute maximum ratings will damage the device.
- Any foreign objects in the waveguide will cause performance degradation and may damage the device.

Copyright © 2023 by Eravant