STA-10-42-F1

Advanced

K Band Fixed Attenuator, High Precision, 10 dB

Description:

Model STA-10-42-F1 is a 10 dB fixed attenuator that is used in millimeterwave systems and operates from 18 to 26.5 GHz. The attenuator has a fixed attenuation value of 10 dB at center frequency, 22.25 GHz. The attenuator's waveguides are manufactured with precision wire EDM to ensure high accuracy and a quality internal surface finish. The design features a sandblasted surface treatment to provide a durable finish. While the attenuator is designed for full waveguide band applications, the attenuation value does show a minor slope within the band due to its distinct mechanical configuration. Other attenuation values are available under different model numbers as **STA-XX-42-F1**, where **XX** is the desired attenuation value.

Features:

- Full Band Coverage
- Low Cost
- Accurate Attenuation Value at Center Frequency

Applications:

- Test Lab
- Instrumentations
- System Integration

Electrical Specifications:

Parameter	Minimum	Typical	Maximum
Frequency Range	18 GHz		26.5 GHz
Attenuation @ 22.25 GHz		10 dB	
Return Loss		20 dB	
Power Handling		750 mW	1000 mW
Specification Temperature		+25 ˚C	
Operating Temperature	-40 ˚C		+85 ˚C

Mechanical Specifications:

Item	Specification
Waveguide Ports	WR-42 Waveguide with UG-595/U Flange
Attenuation Setting	Fixed
Insertion Length	4.00”
Material	Brass
Finish	Gold Plated
Weight	6.0 Oz
Outline	TA-FK

www.sagemillimeter.com | 3043 Kashiwa Street, Torrance, CA 90505
Phone: 424-757-0168 | Fax: 424-757-0188 | Email: sales@sagemillimeter.com

Copyright © 2021 by SAGE Millimeter, Inc.

SAGE Millimeter, Inc.

K Band Fixed Attenuator, High Precision, 10 dB

Typical Measured Attenuation vs Frequency

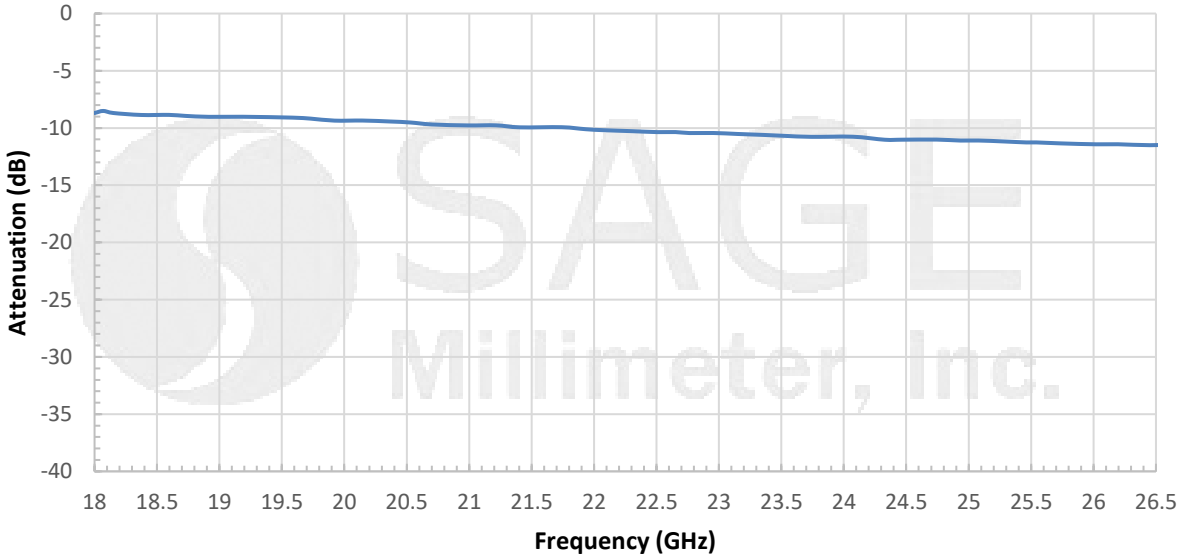

Mechanical Outline: (Unless otherwise specified, all dimensions are in inches [millimeters])

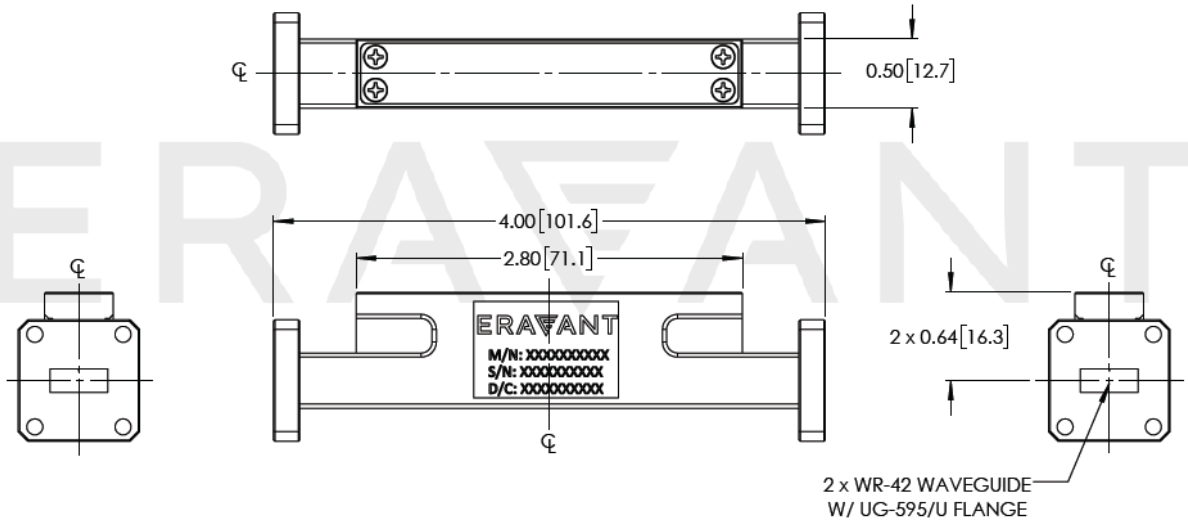

Note:

- All data presented is collected from a sample lot. Actual data may vary unit to unit, slightly.
- All testing was performed under +25 °C case temperature.
- SAGE Millimeter, Inc. reserves the right to change the information presented without notice.

Caution:

- Exceeding absolute maximum ratings will damage the device.
- Any foreign objects in the waveguide will cause performance issues and may damage the device.

www.sagemillimeter.com | 3043 Kashiwa Street, Torrance, CA 90505
Phone: 424-757-0168 | Fax: 424-757-0188 | Email: sales@sagemillimeter.com

Copyright © 2021 by SAGE Millimeter, Inc.