SFD-753114-103-10SF-P1

Rev 1.1

W-Band Amplitude Detector, Small Signal, Positive

Description:

Model SFD-753114-103-10SF-P1 is a W Band amplitude detector that can be used for full or narrow band applications. The detector is zero biased and intended for small signal detection purposes. With a distinct circuitry design and careful diode selection, the detector exhibits high sensitivity and extremely flat output characteristics across the full waveguide operating bandwidth. The detector is designed to have a 10 MHz video bandwidth and a 1 MΩ video output impedance. The minimum detectable signal level is approximately -50 dBm.

Features:

- Full Waveguide Band Operation
- High Sensitivity Without Tuning
- High Sensitivity Stability Over Broad Temperature Range

Applications:

- Radar Systems
- Communication Systems
- Test instrumentations

Electrical Specifications:

Parameter	Minimum	Typical	Maximum
Frequency	75 GHz		110 GHz
Sensitivity*		800 mV/mW	
Sensitivity Flatness		±2.0 dB	
RF Input Power		-20 dBm	
RF Power Handling			+17 dBm
Video Bandwidth**		10 MHz	
Detection Speed, Rise Time (50 Ohm Load)		10 ns	
Output Voltage Polarity		Positive	
Specification Temperature		+25 ˚C	
Operating Temperature	-40 ˚C		+85 ˚C

*Note: The sensitivity is for the input signal level -20 dBm or below.

**Note: The video bandwidth can extend up to 10 GHz.

Mechanical Specifications:

Item	Specification
RF Port	WR-10 Waveguide with UG-387/U-M Anti-Cocking Flange
DC Port	SMA (F)
Case Material	Aluminum
Finish	Gold Plated
Weight	0.4 Oz
Outline	FD-W1-103-A

www.eravant.com | 501 Amapola Avenue, Torrance, CA 90501
Phone: 424-757-0168 | Fax: 424-757-0188 | Email: support@eravant.com

Copyright © 2022 by Eravant

SAGE Millimeter, Inc.

W-Band Amplitude Detector, Small Signal, Positive

Typical Sensitivity vs. Frequency

P_{in} = -20 dBm

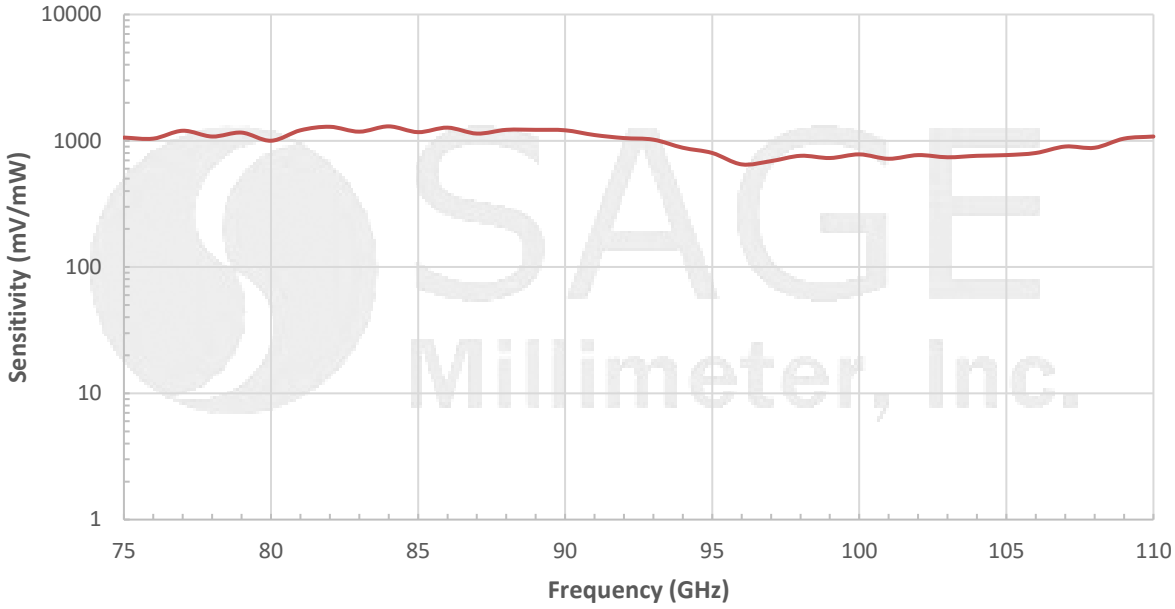

Typical Detected Voltage vs. Input Power

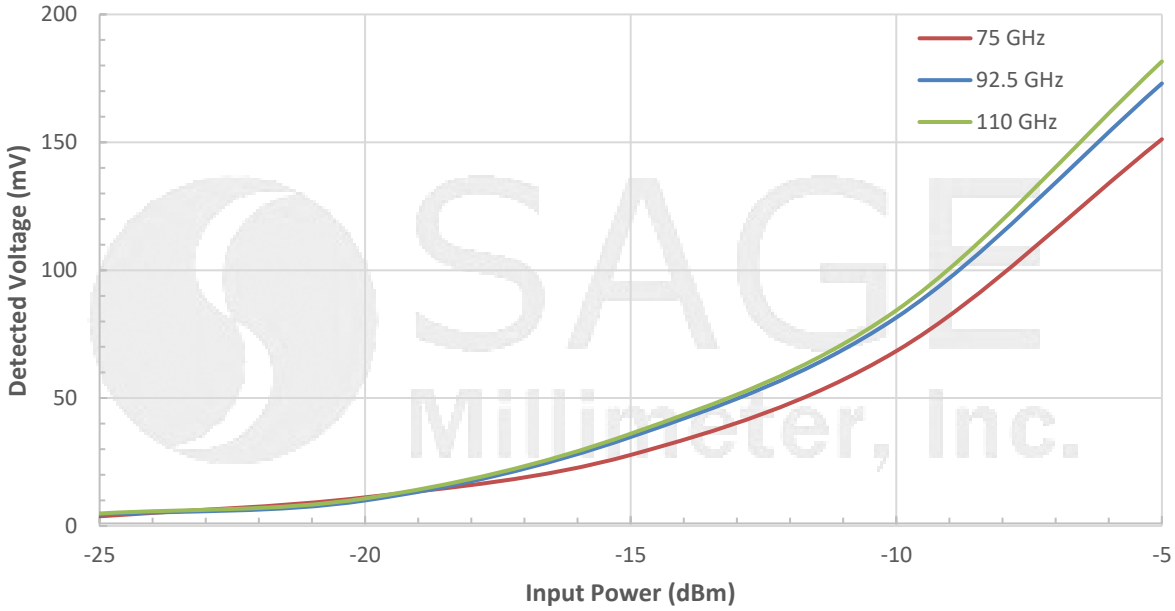

Copyright © 2022 by Eravant

SAGE Millimeter, Inc.

W-Band Amplitude Detector, Small Signal, Positive

Mechanical Outline: (Unless otherwise specified, all dimensions are in inches)

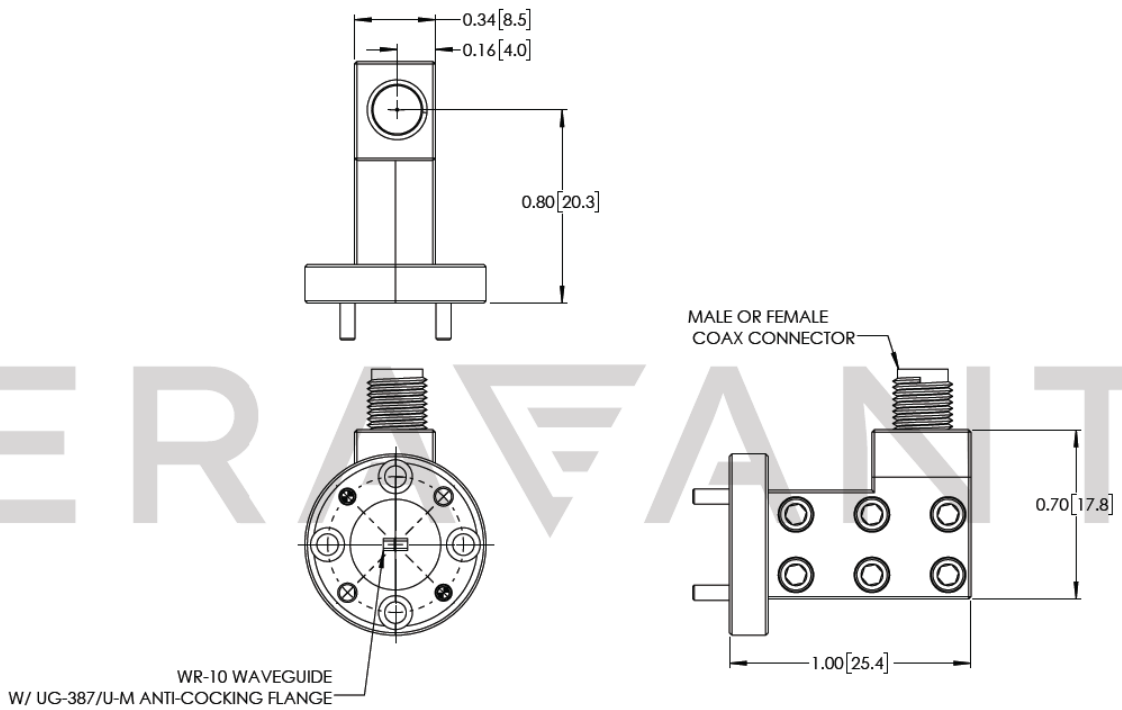

Note:

- All data presented is collected from a sample lot. Actual data may vary unit to unit.
- All testing was performed under +25˚C case temperature.
- The negative output voltage polarity is offered under the model number **SFD-753114-103-10SF-N1**.
- The amplitude detector is a small signal detector. The sensitivity shown is for RF signal -20 dBm or lower.
- Eravant reserves the right to change the information presented without notice.

Caution:

- Exceeding absolute maximum ratings will damage the device.
- The device is static sensitive. Always follow ESD rules when working with the device.
- Any foreign objects in the waveguide will cause performance degradation and can possibly damage the device.
- Proper torque, 8.0 ± 0.15 inch-pounds (0.92 ± 0.05 Nm), should be applied. **Eravant torque wrench, model SCH-08008-S1, is highly recommended.**

www.eravant.com | 501 Amapola Avenue, Torrance, CA 90501
Phone: 424-757-0168 | Fax: 424-757-0188 | Email: support@eravant.com

Copyright © 2022 by Eravant

SAGE Millimeter, Inc.