SCF-55375330-2F2M-L1

Rev 1.1

Coaxial Lowpass Filter, Passband DC to 50 GHz, Rejection 75 to 110 GHz

Description:

Model SCF-55375330-2F2M-L1 is a coaxial lowpass filter with a pass band from DC to 50 GHz. The typical insertion loss of the pass band is 1.5 dB. The rejection band is from 75 to 110 GHz with a typical rejection value of 30 dB. The RF connectors of the filter are male and female 2.4 mm connectors. The passband typical return loss is 15 dB. Other configurations, such as different connectors for input and output are available under different model numbers.

Features:

- Broad Passband
- Low Insertion Loss
- Compact Design

Applications:

- Test Labs
- Instrumentations
- Sub-assemblies

Electrical Specifications:

Parameter	Minimum	Typical	Maximum
Passband Frequency	DC		50 GHz
Passband Insertion Loss		1.5 dB	
Rejection Frequency	75 GHz		110 GHz
Rejection Value		30 dB	
Passband Return Loss		15 dB	
Impedance		50 Ω	
Power Handling			1 W (CW)
Specification Temperature		+25 °C	
Operating Temperature	-40 °C		+75 °C

Mechanical Specifications:

Item	Specifications
RF Ports	2.4mm (F) and 2.4mm (M)
Case Material	Aluminum
Weight	0.5 Oz
Finishing	Gold Plated
Size	0.50” (L) x 0.50” (W) x 0.50” (H)
Outline	CF-LW

www.sagemillimeter.com | 3043 Kashiwa Street, Torrance, CA 90505
Phone: 424-757-0168 | Fax: 424-757-0188 | Email: sales@sagemillimeter.com

Copyright © 2019 by SAGE Millimeter, Inc.

SCF-55375330-2F2M-L1

Rev 1.1

Coaxial Lowpass Filter, Passband DC to 50 GHz, Rejection 75 to 110 GHz

Typical Measured Insertion Loss and Return Loss vs Frequency

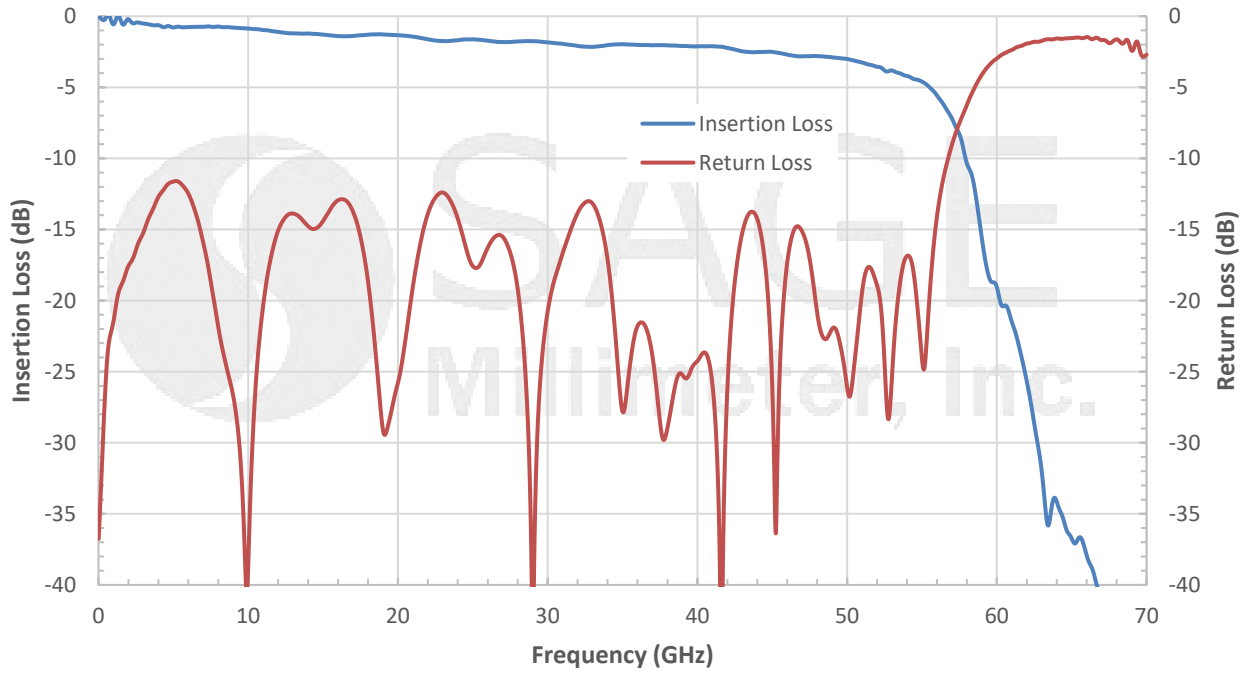

Mechanical Outline: (Unless otherwise specified, all dimensions are in inches [millimeters])

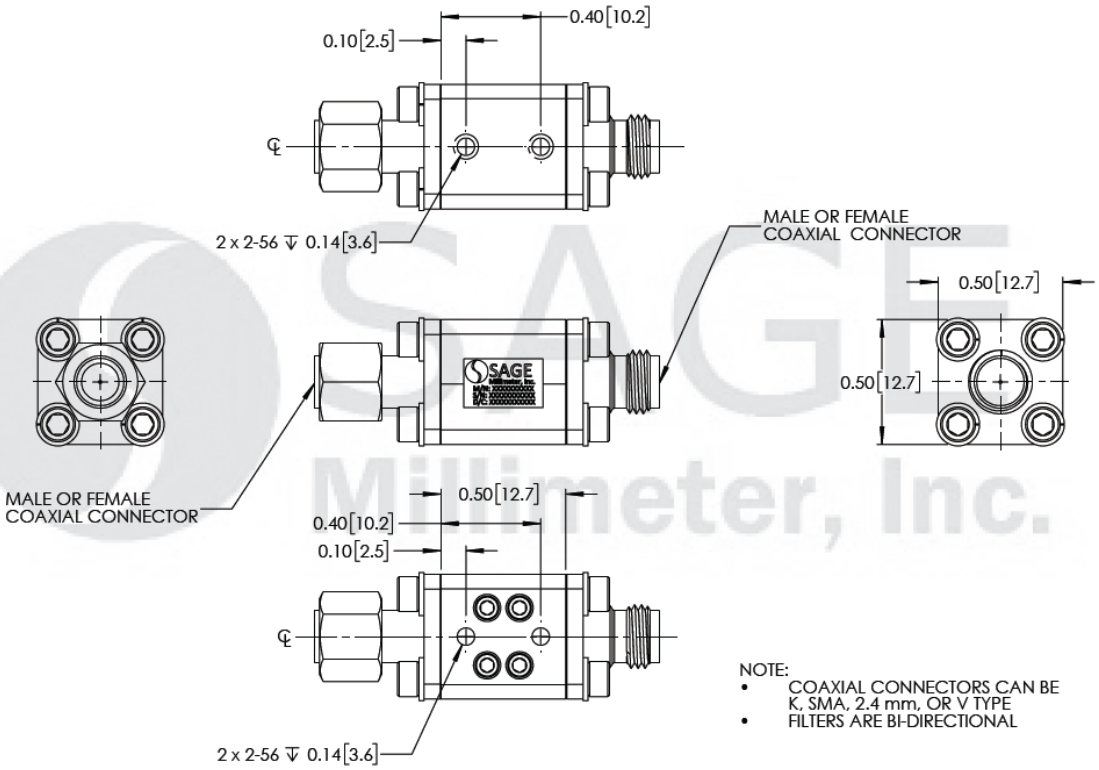

www.sagemillimeter.com | 3043 Kashiwa Street, Torrance, CA 90505
Phone: 424-757-0168 | Fax: 424-757-0188 | Email: sales@sagemillimeter.com

Copyright © 2019 by SAGE Millimeter, Inc.

SAGE Millimeter, Inc.

Coaxial Lowpass Filter, Passband DC to 50 GHz, Rejection 75 to 110 GHz

Note:

- All data presented is collected from a sample lot. Actual data may vary unit to unit, slightly.
- All testing was performed under +25 °C case temperature.
- SAGE Millimeter, Inc. reserves the right to change the information presented without notice.

Caution:

- Proper torque, 8.0 ± 0.15 inch-pounds (0.90 ± 0.02 Nm), should be applied. **SAGE Millimeter torque wrench, model SCH-08008-S1, is highly recommended.**

SAGE Millimeter, Inc.

www.sagemillimeter.com | 3043 Kashiwa Street, Torrance, CA 90505
Phone: 424-757-0168 | Fax: 424-757-0188 | Email: sales@sagemillimeter.com

Copyright © 2019 by SAGE Millimeter, Inc.