SAC-2012-165-S2

Rev 1.3

U Band Conical Horn Antenna, 20 dBi Gain

Description:

Model SAC-2012-165-S2 is a U-band conical horn antenna that operates from 50 to 60 GHz. The antenna offers 20 dBi nominal gain and a typical half power beamwidth of 16 degrees on the E-plane and 20 degrees on the H-plane. The horn also offers typical sidelobes of -20 dB on the E-plane and -28 dB on the H-plane. The conical horn can support linear and circular polarization. The input of this antenna is a 0.165" diameter circular waveguide with UG-383/U-M flange.

Features:

- Circular Waveguide Interface
- Precisely Machined and Gold Plated
- High Return Loss
- Linear and Circular Polarization

Applications:

- Antenna Ranges
- Feed Horns
- System Setups

Electrical Specifications:

Parameter	Minimum	Typical	Maximum
Frequency*	50 GHz		60 GHz
Gain		20 dBi	
3 dB Beamwidth, E-plane		16°	
3 dB Beamwidth, H-plane		20°	
Sidelobes, E-plane		-20 dB	
Sidelobes, H-plane		-28 dB	
Return Loss		23 dB	
Specification Temperature		+25 ˚C	
Operating Temperature	-40 ˚C		+85 ˚C

*Note: Can operate from 46 to 60 GHz if the dominant mode is maintained.

Mechanical Specifications:

Item	Specification
Antenna Port	0.165" Diameter Circular Waveguide
Flange Type	UG-383/U-M Flange
Material	Brass
Finish	Gold Plated
Weight	1.3 Oz
Size	1.80" (L) X 0.93" (Ø)
Outline	AC-CU1-165

www.eravant.com | 501 Amapola Avenue, Torrance, CA 90501
Phone: 424-757-0168 | Fax: 424-757-0188 | Email: support@eravant.com

Copyright © 2022 by Eravant

SAGE Millimeter, Inc.

U Band Conical Horn Antenna, 20 dBi Gain

Simulated Antenna Patterns @ 50 GHz

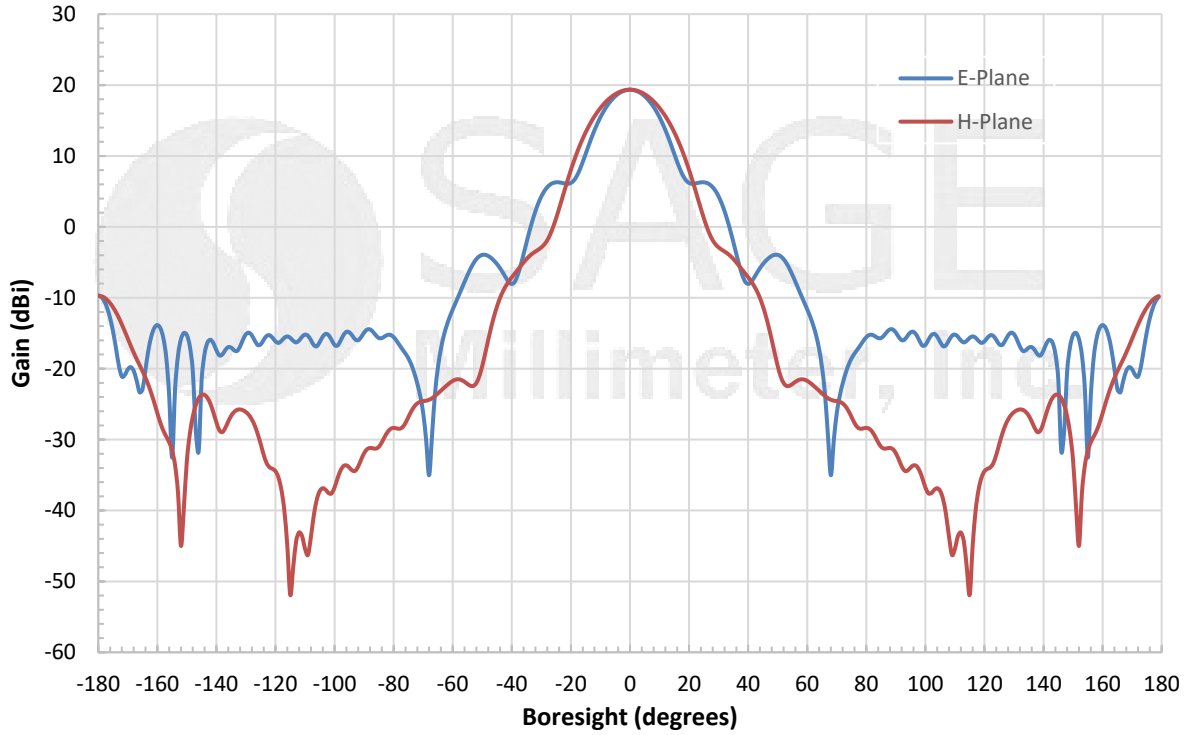

Simulated Antenna Patterns @ 55 GHz

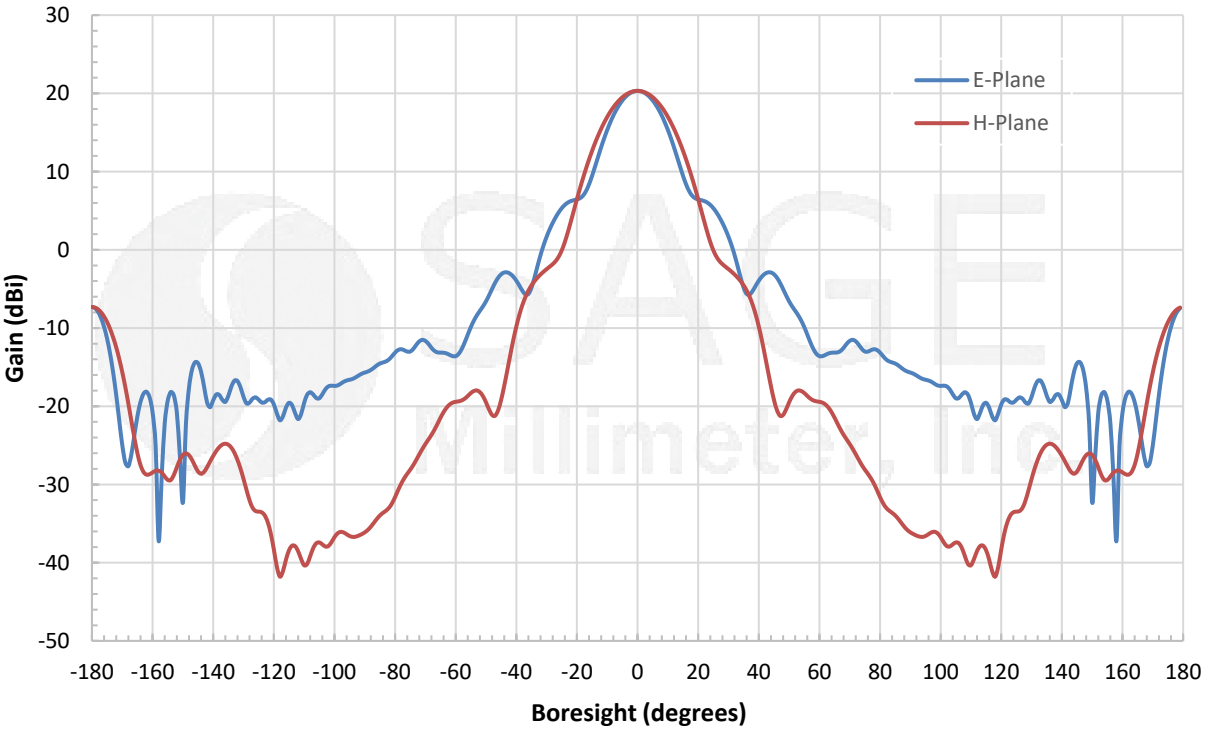

www.eravant.com | 501 Amapola Avenue, Torrance, CA 90501
Phone: 424-757-0168 | Fax: 424-757-0188 | Email: support@eravant.com

Copyright © 2022 by Eravant

SAGE Millimeter, Inc.

U Band Conical Horn Antenna, 20 dBi Gain

Simulated Antenna Patterns @ 60 GHz

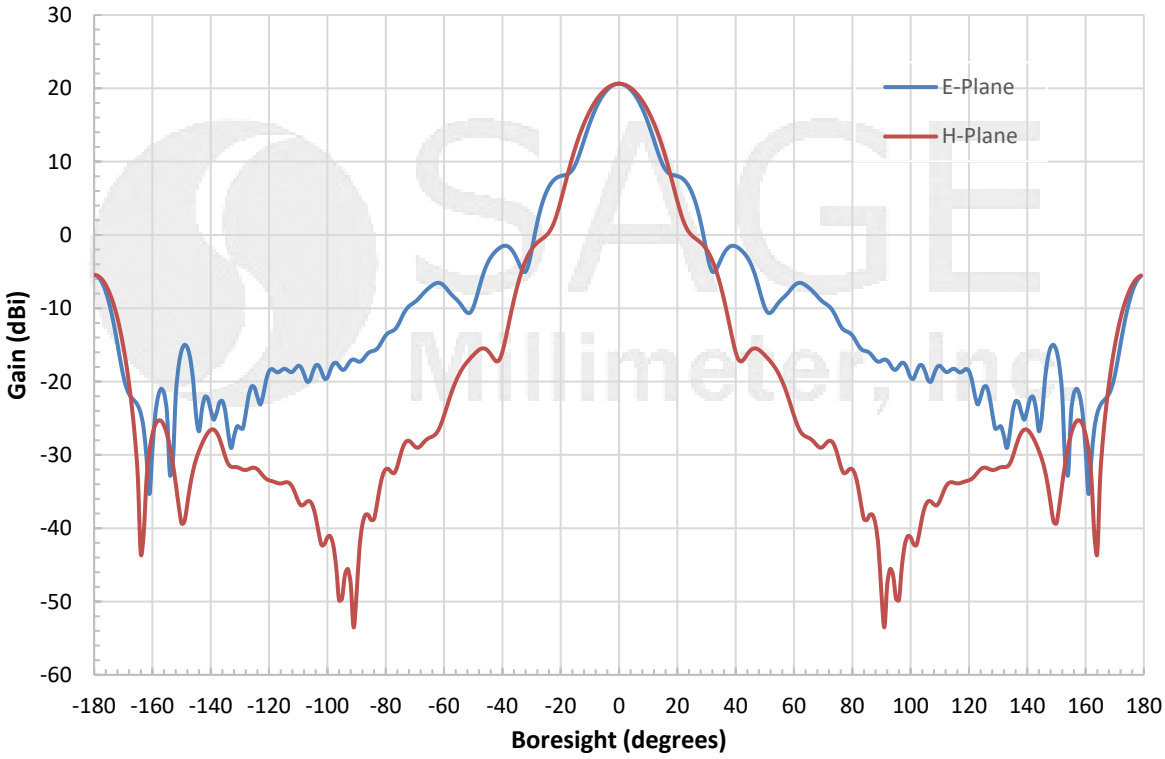

Simulated Return Loss vs. Frequency

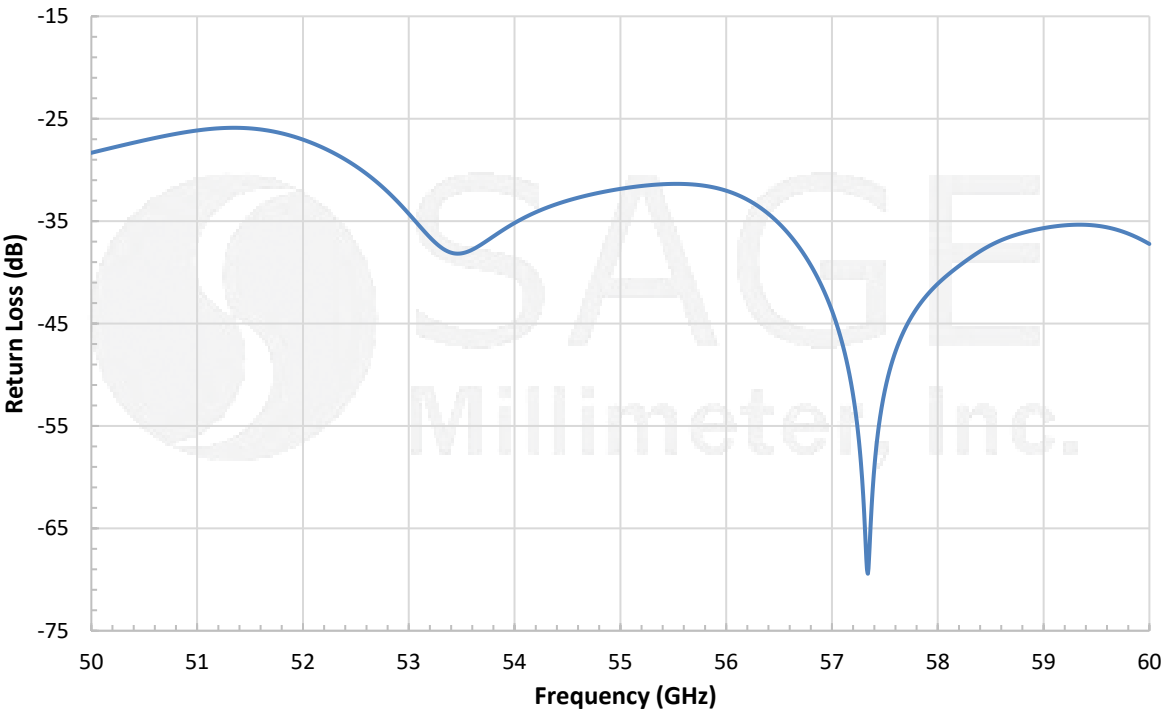

www.eravant.com | 501 Amapola Avenue, Torrance, CA 90501
Phone: 424-757-0168 | Fax: 424-757-0188 | Email: support@eravant.com

Copyright © 2022 by Eravant

SAGE Millimeter, Inc.

U Band Conical Horn Antenna, 20 dBi Gain

Simulated Gain vs. Frequency

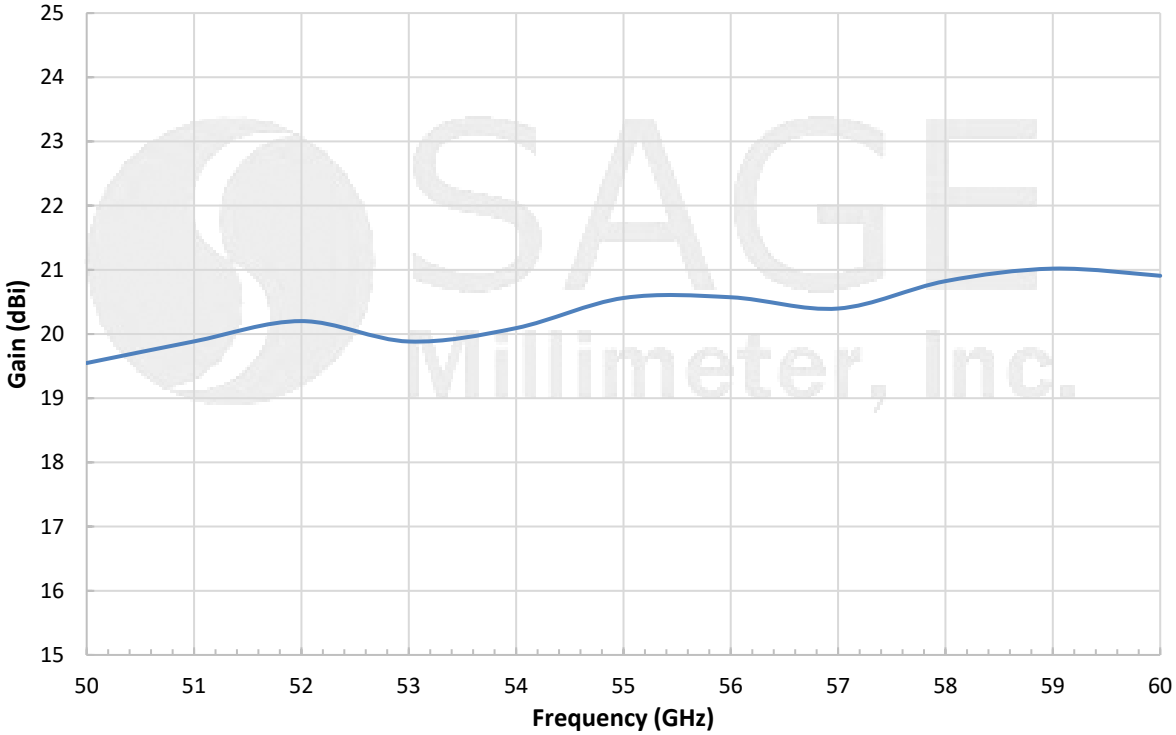

Mechanical Outline: (Unless otherwise specified, all dimensions are in inches [millimeters])

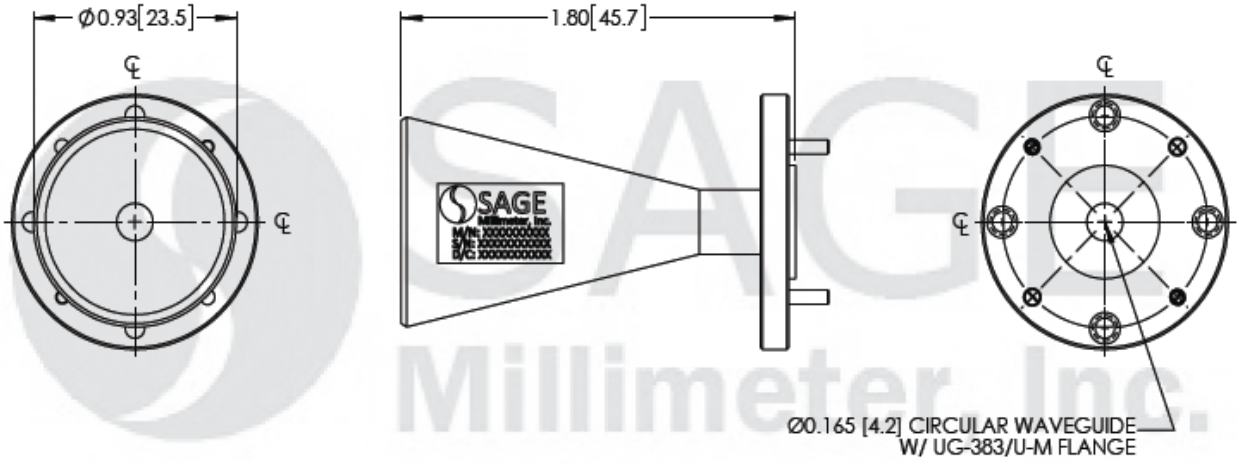

Note:

- This antenna is a mature product. The reasons for only providing simulated data can be found in the following blog here
- Eravant reserves the right to change the information presented without notice.

Caution:

- Any foreign objects in the antenna will cause performance degradation and possible device damage.

www.eravant.com | 501 Amapola Avenue, Torrance, CA 90501
Phone: 424-757-0168 | Fax: 424-757-0188 | Email: support@eravant.com

Copyright © 2022 by Eravant